PALAZZETTI ECOPALEX GTM

Norsk bruks- og installasjonsveiledning med produsentens tegninger

Basert på produsentmanual 004778993, datert 23.03.2026. Gjelder GTM-serien, inkludert GTM70. Norsk bearbeiding av alle hovedkapitler; ikke en autorisert eller ordrett oversettelse. Originalens engelske illustrerte sider følger som vedlegg.

VIKTIG: Produsentens originale dokumentasjon, eget modellspesifikt produkthefte og gjeldende norske forskrifter er styrende for installasjon og sikkerhetsavstander.

1. Generell innledning

Palazzetti Ecopalex GTM er en vedfyrt peisinnsats beregnet på oppvarming av innendørs rom. Den skal bare brukes når ildstedsdøren er lukket, og bare når apparatet er i forsvarlig stand. Les hele produsentmanualen før installasjon, bruk eller service.

Informasjonssymbolene skiller mellom nyttig informasjon, viktige forholdsregler og fare for skade. Oppbevar anvisningen sammen med produktet, og overlever den ved eierskifte. Ved spørsmål til produsenten oppgis serienummeret på typeskiltet på siden av apparatet.

Alle lokale, nasjonale og europeiske krav gjelder i tillegg til produsentens anvisninger. Monteringsarbeid og vedlikehold skal utføres av kvalifisert personell. Bruk originale reservedeler. Produktet er ikke beregnet til matlaging. Produsenten viser til forordning (EU) 305/2011, økodesignforordning (EU) 2015/1185 og EN 16510-2-2.

Ved levering følger installasjons- og vedlikeholdsanvisning, strekkodeetikett, avtakbart kaldhåndtak, 1 meter røykrør og hanske. Se figur 1 i illustrasjonsdelen.

2. Sikkerhetsadvarsler

FARE: Installasjon, kontroll og vedlikehold skal følge produsentens anvisninger og gjeldende regelverk. Monterings- og demonteringsarbeid er forbeholdt fagpersonell. Kontroller bæreevne, brannsikkerhet, lufttilførsel og skorstein. Eventuelle elektriske komponenter må tilkobles sikkert med forskriftsmessig jording.

Under drift blir dør, glass, håndtak og røykrør svært varme. Hold barn, dyr, tekstiler og brennbare gjenstander på avstand. Bruk hanske eller egnet håndtak. Ikke berør glasset, og ikke rengjør, tøm aske eller åpne askeskuff mens apparatet er varmt.

Bruk aldri apparatet med åpen dør, skadet glass eller ødelagte pakninger. Ikke bruk bensin, sprit, parafin eller lignende til opptenning. Ikke brenn avfall, og ikke bruk ovnen som støtte, trinn eller arbeidsflate. Ikke hell vann på ildstedet eller flammene.

Ved unormal funksjon, skade eller uvanlig lyd: avslutt bruken og kontakt fagperson. Ved røyk i rommet: stans bruken, luft ut og kontakt fagperson. Ved pipebrann: steng primærluften og ring brannvesenet (110 i Norge).

Rengjør bare når apparat og aske er helt kalde. Følg serviceprogrammet. Ved lang tids stillstand anbefaler produsenten fuktabsorberende poser i brennkammeret; disse må fjernes før neste opptenning.

3. Brensel

Bruk helst godt tørket bjørk eller bøk. Anbefalt vedfuktighet er høyst 25 %, og ideell vedlengde er omtrent 25 cm. Legg veden vannrett, uten å blokkere ristens åpninger eller hullene i luftfordeleren foran og bak.

Unngå bartrær med mye harpiks, som kan gi raskere avleiringer i røykløpet. Brenn aldri barkavfall, malt eller impregnert tre, treplater, kull, plast, papir, papp eller annet avfall. Overfyll ikke brennkammeret. Ved med mye aromatiske oljer kan gi raskere slitasje på innvendige deler. Produsenten viser til UNI/ISO 17225-1 for vedbrensel.

4. Håndtering og transport

Pakk ut først ved monteringsstedet. Bruk løfteutstyr med kapasitet som overstiger apparatets vekt, og beskytt ømfintlige gulv. Hold apparatet oppreist; ikke legg det vannrett eller vipp det forover mot glassdøren. Unngå rykk og brå bevegelser.

For å løsne transportpallen: skru ut festeskruene på sidene, fjern festebrakettene, løft apparatet og ta bort pallen. Se figur 2. Hold plast og emballasje unna barn på grunn av kvelningsfare.

5. Klargjøring av monteringssted

Monteringsstedet skal være sikkert, ha tilstrekkelig bæreevne og være egnet for lufttilførsel og røykavtrekk. Overflater av brennbart materiale, for eksempel tre, parkett, laminat eller linoleum, skal ha egnet ubrennbar beskyttelse også foran ildstedet.

VIKTIG: De konkrete minsteavstandene til brennbart materiale er angitt i et separat produkthefte som produsenten viser til. De er ikke oppgitt i denne generelle GTM-manualen. Ikke fastsett eller oppgi sikkerhetsavstander ut fra tegningene alene. Sørg for inspeksjonsadkomst.

6. Installasjon

Installasjon skal utføres av kvalifisert fagperson og tilpasses gjeldende norske krav. Kontroller bypassventilen før innbygging: når døren åpnes og frontpinnen trykkes inn, skal ventilen gi motstand og lukke; når pinnen slippes, skal ventilen åpne. Se figurene 14–16 for oppbygning og justering.

Peisomrammingen skal være av ubrennbart materiale, være selvbærende og ikke hvile på eller berøre innsatsen. Figur 3 viser prinsippet med to øvre varmeuttaksrister på 15 × 15 cm, plassert nær taket (omtrent 20 cm), og to nedre sirkulasjonsrister på 15 × 15 cm. Tegningen angir minst 5 mm mellom innsats og omramming; dette er ikke en erstatning for modellspesifikke avstander til brennbart materiale.

Kontroller eksisterende peisåpning mot produktets mål. Ved tilpasning må stabiliteten bevares. Fest medfølgende sikringsplate med M5 × 12-skruer bak, eller til en sidevegg dersom bakre feste ikke er mulig, for å motvirke at apparatet tipper fremover når døren åpnes. Se figurene 4 og 5.

Røykgassystemet skal være dimensjonert og utført for ildstedet. Produsenten viser blant annet til EN 1856-1/-2, EN 1857, EN 1443 og EN 13384-1. Røykrøret skal ha samme tverrsnitt som apparatets

røykuttak; diameter kontrolleres mot modellens tekniske datablad. Unngå brennbar isolasjon som glassull eller papirbelagt isolasjon ved varmeførende deler.

Røykrørtilkoblingen skal være tett. Uttrekkbare fleksible metallrør er ikke tillatt. Retningsendringer skal være høyst 45° fra loddrett, helst 30°. Tett skjøtene med varmebestandig materiale. Ikke monter vanlig spjeld i røyktilkoblingen. Ved trekk over 20 Pa beskriver produsenten mulighet for trekkregulator, vurdert av fagperson. Se figurene 6 og 7.

Forbrenningsluft utenfra er påkrevd etter produsentens anvisning. Luftinntaket skal være dimensjonert, permanent åpent, sikret med rist og plassert slik at det ikke blokkeres. Der ytterveggen ligger bak innsatsen, angis et inntak omtrent 20–30 cm over gulv; nødvendig størrelse står i produktheftet. Luft skal ikke hentes fra garasje, rom med brennbart lager eller brannfarlige rom. Se figurene 8–10.

Ved valgfritt sentrifugalviftesett kreves egne luftinntak. Produsenten beskriver luftinntak fra rommet eller tilstøtende rom, med rister på Ø 15 cm. Kjøkken, bad og soverom er utelukket som tilstøtende luftkilde i den beskrevne løsningen. Rengjør filtre og finmaskede rister jevnlig. Se figurene 11 og 12.

Ved innsetting i eksisterende peis legges et bånd av ildfast tettemasse i røykstussen; produsenten angir masse som tåler 800 °C. Skyv innsatsen inn i endelig posisjon. Midlertidige stålskinner på 2–3 mm kan gjøre innskyvingen lettere og fjernes etterpå. Se figur 13.

7. Igangkjøring

Første opptenning skal utføres av installatøren. Fjern emballasje og etiketter fra brennkammer og glass. Fyr med små mengder ved, omtrent 1 kg per time, og hold lav effekt i minst fire timer. Fortsett med tilsvarende små fyringsmengder de neste tre dagene før maksimal belastning. Dette tørker ut eventuell restfukt i ildfaste materialer.

Under første opptenninger kan det oppstå midlertidig lukt og noe røyk fra materialer som tørker eller herder. Sørg for god lufting. Innsatsen er beregnet på periodisk vedfyring: la forrige vedmengde brenne ned til glør før ny påfylling.

Bypassventilen er fabrikkinnstilt. Eventuell justering krever fagkunnskap: For GTM70 løftes deflektoren og etterforbrenningsplaten tas ut. Deretter fjernes bakvegg, sidevegger og øvre deflektor i angitt rekkefølge, og justeringsskruen løsnes for å plassere bypassventilen riktig. Se figurene 14–16. Ikke utfør denne justeringen uten kvalifisert servicepersonell.

8. Bruk

Bruk den medfølgende hansken ved varme deler. Åpne døren med det avtakbare kaldhåndtaket. Åpne både primærluftregulator (A) og glassluftregulator (B) helt mot (+). Legg ved forsiktig på risten (C), med naturlig opptenning på toppen og tynne vedpinner på kryss. Tenn fra toppen og lukk døren godt.

Hold luftregulatorene åpne slik at flammene blir høye og klare. Reduser først mot (-) når det finnes et godt glødelag. Figur 17 viser betjeningen.

Ved påfylling: åpne døren langsomt for å begrense røykutslag, legg inn passende vedmengde og lukk døren. Fyll på når flammene har avtatt og det er glør. Unngå overfyring. Bypassventilen bidrar til å føre røyken opp i skorsteinen når døren åpnes.

Primærluftregulator (A) styrer forbrenningshastigheten: mer luft mot (+), mindre luft mot (-). Glassluftregulator (B) kan åpnes for å lede luft over keramikkglasset og redusere sot. Bruk hanske. Se figur 18.

9. Rengjøring og vedlikehold

Brukeren kan utføre vanlig rengjøring. Service og vedlikehold som krever demontering skal utføres av autorisert fagperson. Før alt arbeid: la apparat og aske bli helt kalde; slå av og koble fra eventuell elektrisk tilførsel.

Før hver opptenning: kontroller og rengjør ildstedsristen, askeskuff/askerom og glass. Ta ut risten, fei rester ned i askeskuffen, og tøm askeskuffen daglig. Aske som blir liggende kan gi korrosjon, hindre lufttilførsel og overopphete støpejernsristen. Rengjør også hullene i luftfordeleren foran og bak. Se figurene 19 og 20.

Små sprekker mellom ildfaste plater kan være normale fordi materialet utvider seg ved oppvarming. Glass rengjøres kaldt med fuktig klut eller fuktet papir med litt aske. Ikke bruk skuresvamp, løsemidler, syrer eller sterke rengjøringsmidler. Se figur 21.

Årlig, eller etter hver 4 000 kg brent ved, skal kvalifisert fagperson kontrollere pakninger, røykoppsamler, dørsikkerhet, røykkanal og apparatet. Røykoppsamleren rengjøres ved å fjerne bakvegg, sidevegger, deflektor og deksel, deretter børste røykgassveiene og fjerne rester med egnet askesuger. Se figurene 22 og 23.

Skorsteinen må undersøkes for sot og aske, spesielt i horisontale strekk. Produsenten advarer om at avleiringer på 5–6 mm kan antennes ved høy temperatur og gnister. Fagpersonen skal også kontrollere bypassventil, pakninger, innvendige deler, røykuttakets tetthet og korrekt drift.

10. Demontering og avfallshåndtering

Eieren er ansvarlig for korrekt kassering etter gjeldende miljø- og sikkerhetsregler. Slå av apparatet og koble fra strøm før demontering. Ikke la et utrangert ildsted stå tilgjengelig for barn eller dyr. Bruk godkjent avfallsmottak eller kvalifisert avfallsaktør.

Eventuelle elektriske komponenter og batterier skal tas ut og leveres separat til godkjent mottak. Materialer skal sorteres for gjenvinning. Produsentens originalmanual omtaler også eldre EU-direktiver for elektrisk avfall; følg gjeldende norske avfallsregler.

Vedlegg: Originale tegninger og engelske produsentsider

Følgende sider er uendrede originalillustrasjoner og originaltekst fra Palazzettis engelske del (trykte sider 30–52). Figurhenvisningene i den norske teksten viser til disse sidene. Originalsidene følger i sin helhet.

1 FOREWORD

Palazzetti appliances are manufactured and tested in compliance with European safety directives. Reproduction, translation or printing of this manual, in whole or in part, is only permitted with the authorisation of Palazzetti.

The technical information and images contained in the manual are the exclusive property of the company and are not to be disclosed.

Please read all instructions carefully before using the appliance.

If in doubt, contact a specialist Palazzetti technician for assistance.

Palazzetti reserves the right to change the technical or functional characteristics of its appliances at any time and without prior notice.

1.1 Symbols

Important points in this manual are highlighted with the following symbols.

INFORMATION: Provides useful information on proper appliance use and clarifies the persons responsible for its use or operation.

CAUTION: Highlights an important note to be followed to avoid errors in the use or operation of the appliance.

DANGER: Warns operators of a potentially dangerous situation that may lead to accidents or material damage if the instructions provided are not followed.

1.2 Intended use

This appliance is used for indoor heating. Wood burning.

The appliance must only be operated with the firebox door closed.

The intended use is only valid if the appliance is in good condition and working properly.

1.3 Purpose and content of the manual

This manual explains the basic rules for correctly installing the appliance.

The instructions must be followed to ensure safe and proper operation.

1.4 Storing the manual

Storage and consultation

The manual must be stored carefully and must be available for consultation at all times, both by the user and by assembly and maintenance personnel.

The installation manual is an integral part of the appliance.

Deterioration or loss

If the manual is damaged or lost, a replacement can be requested from Palazzetti.

Selling on the appliance

If the appliance is sold on, the user must hand over this manual to the new purchaser.

1.5 Updating the manual

This manual is up to date with the technology available when the appliance was put onto the market.

If changes or new technologies are introduced in the future, appliances already sold and their manuals will not be considered incomplete or incorrect.

1.6 General information

The information given in this manual covers general rules. All local, national and European standards in force in the country where the appliance is installed must nonetheless be complied with.

Information

When communicating with the manufacturer, always quote the serial number and data stated on the data plate.

In the event of problems, contact the dealer or a technician authorised by the manufacturer. For repairs, request original spare parts.

Check and clean the exhaust flue duct (connection to the exhaust flue) at regular intervals.

The appliance is not designed for cooking.

Keep this instruction manual as it will be an integral part of the appliance throughout its lifetime. When selling or transferring the appliance to another user, always make sure the manual stays with the appliance.

If it is lost, request a copy from the manufacturer or authorised dealer.

Maintenance

Maintenance must be carried out by qualified professionals authorised to work on the appliance referred to in this manual.

Liability for installation work

Palazzetti will not be held liable for installation work. The person responsible for this work is the installer, who must check the exhaust flue and air vent and ensure that the installation solutions adopted are correct.

1.7 Compliance

The appliances described in this manual comply with the provisions of the following European directives:

- Regulation (UE) n. 305/2011 (CPR)
- Regulation (UE) 2015/1185 (Ecodesign)**

**The following harmonised standards and regulations have been applied:

UNI: EN16510-2-2

1.8 Manufacturer's liability

In handing over this manual, Palazzetti declines all liability, whether civil or criminal, direct or indirect, arising from:

- Failure to install in compliance with current regulations and safety directives.
- Total or partial failure to follow the instructions given in the manual.
- Installation performed by unqualified or untrained personnel.
- Failure to use in compliance with safety directives.
- Modifications or repairs not authorised by the manufacturer.
- Failure to carry out ordinary maintenance.
- Exceptional events (e.g. natural disasters).

1.9 Technical support and maintenance

Palazzetti provides an extensive network of technical support centres with specialised, trained and qualified technicians.

The headquarters and sales network are always available to direct you to the nearest technical support centre.

1.10 Spare parts

Only use original spare parts.

Do not wait until components are completely worn out before replacing them.

Preventive replacement of a worn component reduces the risk of accidents caused by sudden breakage, which can result in serious personal injury and property damage.

1.11 Data plate

The data plate (**A**) is located on the side and identifies the appliance's technical data, including the manufacturer's details, the serial number and the CE marking.

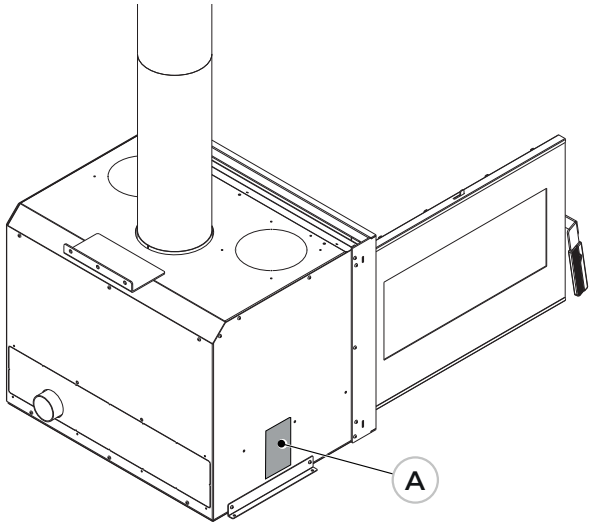

Figure 1

Appliance images are for illustration purposes only

The serial number must always be quoted when making any enquiries concerning the appliance.

1.12 Appliance delivery

The appliance is delivered packaged and fastened to a wooden pallet that allows it to be handled by forklift trucks and/or other means.

The following material is packed with the appliance:

- installation and maintenance manual
- barcode label
- cool hand handle
- 1 m of flue pipe
- glove

2 SAFETY WARNINGS

2.1 Warnings for the installer

Follow the instructions given in this manual.

The appliance assembly and disassembly instructions are intended for specialist technicians only.

The appliance must be installed, used and maintained in compliance with the manufacturer's instructions and current regulations. Failure to follow the instructions or incorrect operations may lead to hazards, harm to persons or pets, damage to property, health problems or malfunctions.

Installation, operation checks and maintenance must only be carried out by authorised and qualified personnel.

The cladding must prevent access to hazardous parts.

Only use original spare parts recommended by the manufacturer.

The responsibility for work in the installation area lies with the user, who must also ensure the proposed solutions are correct.

The installer must comply with all local, national and European safety regulations.

The appliance must be installed on floors with adequate load-bearing capacity.

Check that the exhaust flue and air vent comply with the type of installation.

Installation precautions

Do not make temporary electrical connections with temporary or uninsulated cables.

Check the electrical system is properly earthed.

Installer safety

Before assembling or disassembling the appliance, the installer must:

- Not operate in adverse conditions.
- Be in excellent psycho-physical condition.
- Check that personal protective equipment is intact and functional.
- Wear gloves and safety shoes.
- Use electrically insulated tools.
- Ensure that the working area is free of obstacles.

Room requirements

Install the unit in a safe, non-fire-hazardous room with air supply and flue gas outlet.

Check the strength of the floor and, if it is made of flammable material, provide adequate insulation.

2.2 Warnings for technical maintenance personnel

Maintenance must only be carried out by authorised and qualified personnel.

Always follow the instructions in this manual.

Use personal protective equipment and other means of protection.

Before starting any work, make sure the appliance is completely cool.

If even one of the safety devices fails to function, the appliance must be considered unusable.

2.3 Warnings for the user

The appliance can only be switched on after the installation is complete, including the cladding.

For correct and safe use, always follow the instructions in this manual.

The appliance's external surfaces (door, handle, glass, flue exhaust pipes, etc.) become very hot. Do not touch them without protective clothing or suitable tools.

Use utmost caution during operation, in particular:



Avoid direct contact with hot parts.



Keep children and pets away from the appliance.



Do not use flammable materials near the appliance.



Do not touch or approach the glass of the firebox door: it is very hot and can cause burns.



Do not stare at the flame for too long.



Do not place laundry directly on the appliance to dry it: risk of fire.



Do not touch the flue gas exhaust.



Do not carry out cleaning of any kind.



Do not remove the ash.



Do not open the ash drawer (where provided).

Safe use of the appliance

The appliance may be used by persons over the age of 8 and by those with reduced abilities provided they are supervised or have received clear instructions.

Children must not play with the appliance.

Cleaning that can be done by the user must not be done by children without supervision.

Before using the appliance

Read and understand the entire manual before any operation.

Errors or incorrect settings can cause hazards or malfunctions.

Safety

Only technicians must access the internal parts.

Always observe the data plates on the appliance. If damaged, request original spare parts from the manufacturer.

Follow the ordinary and extraordinary maintenance programme.

Proper use

Clean the appliance every day before use.

Do not use the appliance if:

– it is working strangely,
– you suspect something is broken,
– you hear unusual noises.

In the event of a fault, switch off immediately and call a specialist technician.

Do not throw water on a burning appliance or fire.

Do not use the appliance as:

– a support,
– a stepladder,
– a countertop.

Important warnings

Cleaning: do not clean the appliance until it is completely cool, including the ash.

Smoke or explosion: if smoke comes into the room or damage suddenly occurs, switch off immediately, open the windows and call the technician.

Fire in the exhaust flue: fully close the primary air (combustion air adjuster) and call the fire brigade.

Draught problems: if the exhaust flue is not working properly, clean it according to the instructions in section "**Flue system maintenance**".

Painted parts: do not touch painted parts while the appliance is switched on.

Responsibility: improper use is the responsibility of the user and releases the manufacturer from all liability.

Prohibitions

Do not use the appliance with the door open.

Do not use if the glass or seals are damaged.

Do not modify or replace parts with non-original components.

Do not wash with water.

Do not stand too close to the appliance when it is on.

Do not use as an incinerator.

Do not use petrol, alcohol, kerosene or similar liquids to ignite or rekindle the fire. Keep them away from the appliance.

Before switching on

Clean the ash drawer.

Only use fuel recommended by the manufacturer.

Tips for avoiding corrosion

Clean well to avoid ash build-up.

Only use fuel with the characteristics indicated in the manual.

Do not use solvents, acids or aggressive products to clean glass and internal parts.

Avoid humid or brackish environments.

If the appliance is not used for a long period of time (e.g. during the summer), place desiccant bags inside the combustion chamber and remove them before switching on again.

3 FUEL CHARACTERISTICS

3.1 Fuel characteristics

The appliance should be fuelled with well-seasoned beech/birch wood. Each type of wood has different characteristics that also influence combustion efficiency.

Conifer wood (pine or fir) is not recommended: it contains high amounts of resinous substances that quickly clog the exhaust flue.

Waste, bark, wood treated with paint, panels, charcoal, plastics, paper and cardboard may not be burned, under penalty of voiding the appliance's warranty.

Continuous and prolonged use of wood particularly rich in aromatic oils (e.g. eucalyptus, myrtle, etc.) causes sudden deterioration of the appliance's internal components.

To achieve the nominal kW output of the appliance, use the correct amount of wood, avoiding overloading the combustion chamber.

Use the correct amount of wood, avoiding overloading the combustion chamber.

The wood must have:

- Humidity ≤ 25% (recommended value),
- Ideal length: approx. 25 cm,
- Horizontal arrangement, without obstructing:
  - the gaps in the firebox grille,
  - the front and rear holes of the combustion air distributor.

Reference standard for fuel: UNI/ISO 17225-1 - "solid biofuels".

Do not use the appliance to burn waste.

4 HANDLING AND TRANSPORT

The appliance arrives complete with all parts: metal structure assembled and inner lining fitted, suitably packaged for transport.

Unpack only when the appliance is at the installation site.

The appliance must be moved and unpacked using suitable means and its compatibility with the room in which it is to be installed must be checked.

Do not allow children to play with the packaging (e.g. film and polystyrene).

Choking hazard!

When moving, lifting and unpacking the appliance:

- always keep it in an upright position;
- never tip it into a horizontal position;
- never tip it onto its front to avoid breaking the firebox glass door.

4.1 Removing from the transport pallet

Disposal may only be carried out by third parties through companies authorised to recover and dispose of materials.

Comply with the regulations in force in the country of operation, both for disposal and, where applicable, for reporting disposal.

To remove the appliance from the transport pallet:

- unscrew the side fastening screws;
- remove the fastening brackets;
- lift the appliance;
- remove the transport pallet.

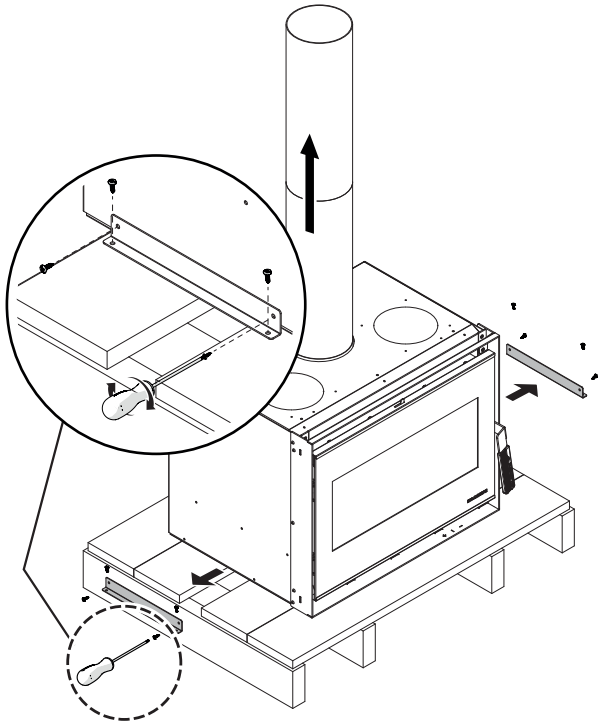

Figure 2

Appliance images are for illustration purposes only

4.2 Transport

Check that the forklift has a load capacity greater than the weight of the appliance. The lifting equipment operator is responsible for the correct lifting of loads.

Protect delicate floors (wood, parquet) to avoid damage caused by the weight of the appliance during movement.

During lifting:

- avoid jerks or sudden movements.
- Take care as the appliance may become unbalanced.

5 PREPARING THE INSTALLATION SITE

5.1 General considerations

The following paragraphs contain instructions to follow in order to obtain maximum performance from the appliance and ensure its safety.

These instructions represent best practice developed on the basis of experience and technical standards.

The installer may adopt alternative solutions provided they comply with the national, regional and municipal laws and regulations in force at the installation site.

For Italy, installation must be carried out by a qualified professional in compliance with standard UNI 10683.

5.2 Safety precautions

The appliance must be assembled and disassembled by specialist technicians only.

We recommend checking their qualification and actual capabilities.

For Italy, these technicians must have a letter "C" qualification issued by the chamber of commerce in compliance with D.M. 37/08.

5.3 Installation site

For the minimum clearances that must be observed when positioning the appliance in relation to flammable materials and objects, please refer to the product booklet supplied with the appliance.

If the floor is made of flammable material (e.g. wood, parquet, linoleum, laminate) or carpeted, it must be protected with a fire-retardant base under the appliance.

The protection must also extend to the front to prevent damage in case any combustion residue falls out while cleaning.

The manufacturer declines all liability for any changes in the characteristics of the flooring material under the protective base.

Ensure there is sufficient room to perform maintenance.

Remember to observe the minimum distance from flammable materials as stated in the product booklet.

Lay the power line in the vicinity of the appliance to connect the power cable (if present).

6 INSTALLATION

6.1 General considerations

The following paragraphs contain instructions to follow in order to obtain maximum performance from the purchased appliance.

The following instructions are subject to compliance with any national, regional and municipal laws and regulations in force in the country where the appliance is installed.

The following checks must be carried out before installing the appliance and fitting the cladding:

Check the bypass valve is working correctly:

– Open the door.

Press the pin on the front:

– if the valve offers resistance when the pin is pressed, it means it is working correctly and closes.
– When the pin is released, the valve must open.

For a visual check, remove the flue gas deflector as instructed in the product booklet.

6.2 Assembly diagram

The cladding must be made of fire-retardant material.

Properly insulate any finish in combustible material or comply with the minimum clearances specified in the product booklet.

Installation regulations require the installation of two heat recovery grilles as close to the ceiling as possible (approx. 20 cm) (**C**).

Incorrect installation may compromise the safety of the appliance.

The fireplace cladding, regardless of the material used, must be self-supporting with respect to the appliance and must not come into contact with it.

If there are flammable structures or materials behind or near the firebox, always observe the minimum safety clearances stated in the product booklet.

If present, the electrical system must be earthed and equipped with a residual current device, in compliance with current regulations.

The flue gas outlet duct must be equipped with its own earth connection.

Example assembly diagram

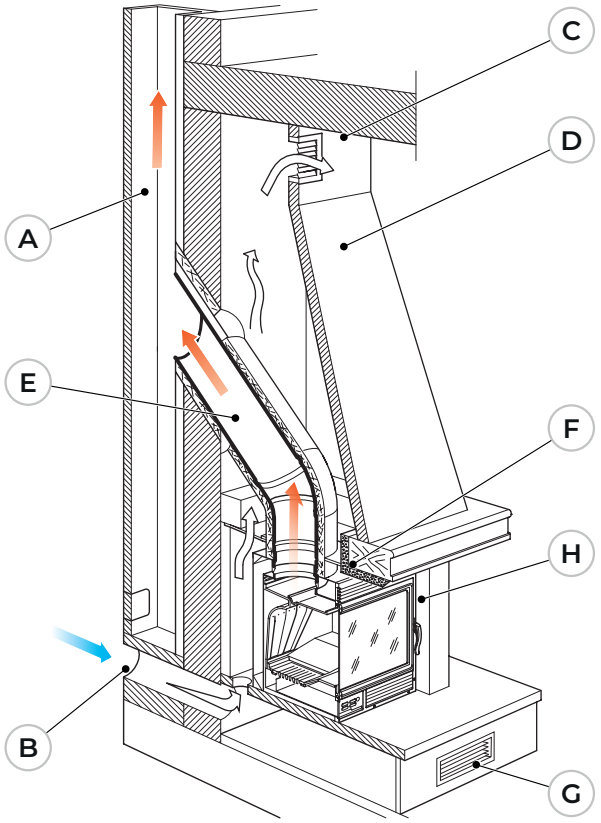

Figure 3

Appliance images are for illustration purposes only

A Chimney
B External air vent
C 2 Heat recovery grille 15x15
D Fire-retardant counter hood and supporting structure
E Flue pipe
F Fire-retardant material
G 2 Air recirculation grille 15x15
H Min. clearance of 5 mm between cladding and appliance

6.3 Adaptation work

Before installation, it is necessary to:

- check the dimensions of the existing fireplace and compare them with those given in the product booklet.
- If it is necessary to adapt the fireplace by cutting or modifying the inner walls, take care not to compromise its stability.

6.4 Safety plate

Due to the natural tendency to tip forwards, the mounting plate (**A**) provided must be fastened at the back of the installation site, using the screws M5x12.

This counterbalances the stresses when opening the door.

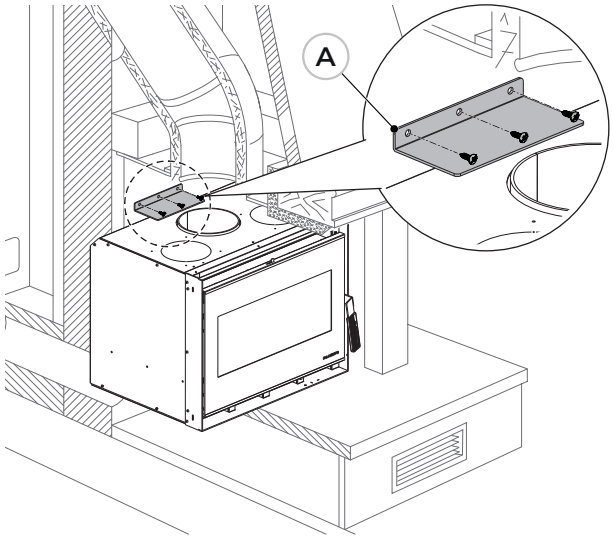

Figure 4

Appliance images are for illustration purposes only

If it is not possible to fasten the plate to the back of the installation site, it must be fastened to one of the two side walls (**B**).

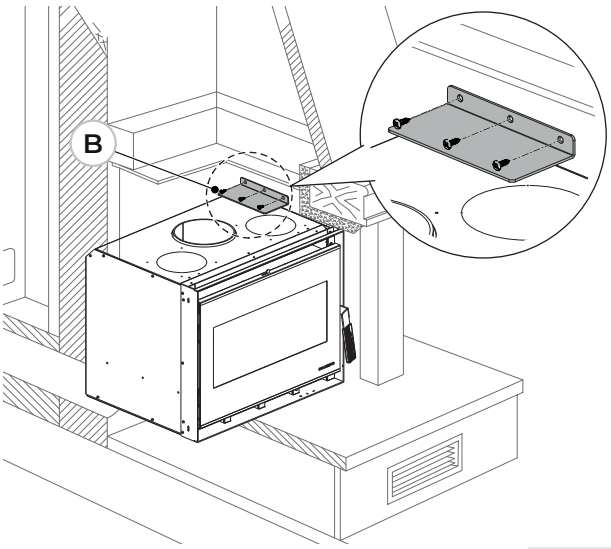

Figure 5

Appliance images are for illustration purposes only

6.5 Flue gas evacuation system

The appliance must be connected to a suitable flue gas evacuation system that ensures proper dispersion of combustion products into the atmosphere, in compliance with standards:

EN 1856-1-2, EN 1857, EN 1443, EN 13384-1, EN 12391-1, UNI 10683

(both dimensions and construction materials).

The flue pipe (**A**) between the firebox and the chimney must have the same cross-section as the flue gas outlet of the fireplace.

The flue pipe diameter must match that shown on the appliance data sheet.

The components of the flue gas evacuation system must comply with the intended operating conditions and be CE marked.

A collection chamber with inspection for solids and condensation should be provided under the chimney inlet.

Do not use glass wool or paper-backed insulation: it could catch fire.

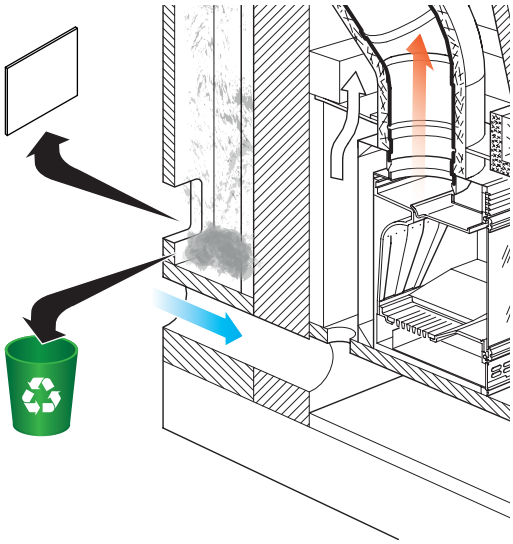

Figure 6

Appliance images are for illustration purposes only

6.6 Flue gas connection

The flue gas connection must be sealed and extendable flexible metal hoses must not be used. Changes in direction away from the flue gas outlet of the appliance must be made with elbows not exceeding 45° (better still if only 30°) from the vertical line.

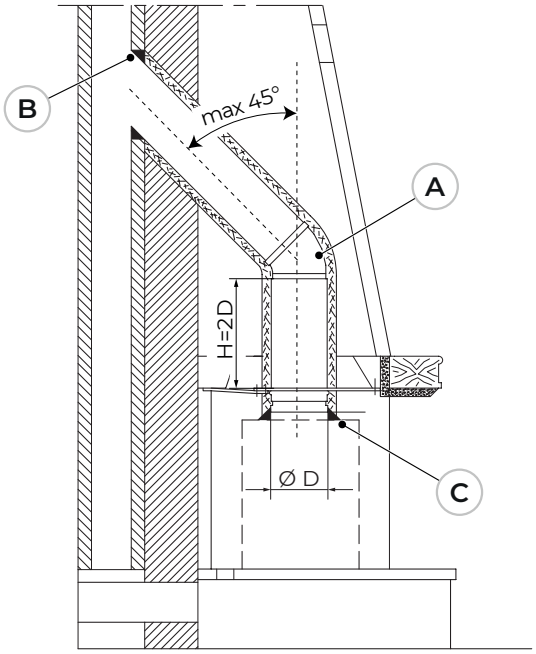

Figure 7

Appliance images are for illustration purposes only

The connection can be made in two ways:

Direct connection

Between Ecopalex and the exhaust flue. In some cases it is necessary to adapt the existing hole in the hood (or make a new one) to allow the flue pipe through (**A**).

Connection with telescopic pipe kit (optional)

This solution is only possible for installations on existing fireplaces.

The flue pipe connection between the appliance and the chimney must be sealed by sealing all union couplings (B, C) with material suitable for high temperatures.

An imperfect seal can compromise the safety of the appliance and reduce its performance.

The chimney cap must be:

- anti-downdraft,
- with an internal cross-section equivalent to that of the exhaust flue,
- with a flue gas outlet cross-section at least twice the internal cross-section of the flue gas duct.

Do not insert any draught throttle valve on the fitting.

In case of excessive draught (above 20 Pa), a draught regulator can be inserted. Excessive draught reduces the possibility of flame control by decreasing the efficiency of the appliance.

6.7 Air vent

The appliance must have the right supply of combustion air to ensure proper combustion.

An external air vent is compulsory to ensure the supply of combustion air to the appliance and/or recirculation of room air.

It must be correctly sized and protected by an insect screen.

A permanent, non-closeable protective grille must be installed outside.

In windy and weather-exposed areas, provide rain and wind protection.

Ensure that the air vent is positioned so that it cannot be accidentally obstructed.

Drilling the hole

If the rear wall of the appliance is external, create a hole for the combustion air inlet:

– height above ground: approx. 20–30 cm,
– comply with the clearances specified in the product booklet.

If it is not possible to create the external air vent in the room, it can be created in an adjoining room as long as it is:

– permanently communicating,
– fitted with a grille.

If there are other heating or extraction appliances in the installation room, combustion malfunctions caused by a lack of combustion air may occur.

Combustion air vents must be correctly sized to ensure:

– the necessary supply of air,
– the correct functioning of all devices in the room.

It is forbidden to draw combustion air from garages, combustible material warehouses or rooms at risk of fire.

Depending on the local regulations in force, the possible configurations for the combustion air vent are 3:

– the cladding must provide an external air vent (**B**) ducted to the firebox. The lower grille (**L**) provided must be installed on the cladding to recirculate room air;

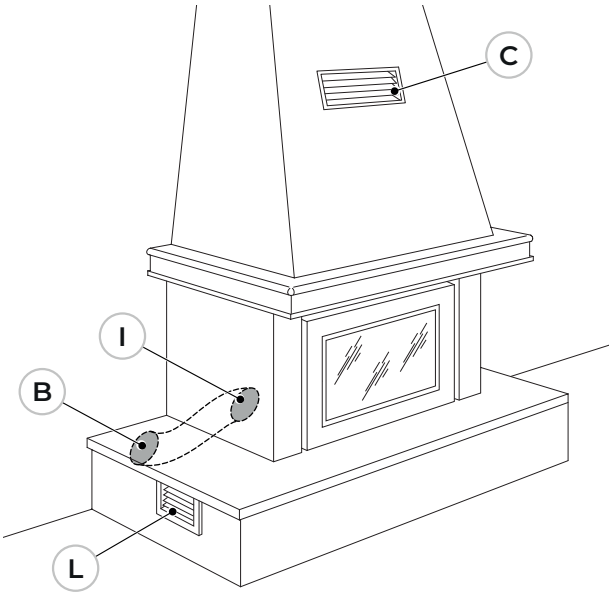

Figure 8

Appliance images are for illustration purposes only

– air vent (**N**) on the cladding, ducted to the firebox. Air recirculation grille (**G**) (not included) on the cladding and wall hole (**M**) for room air recirculation;

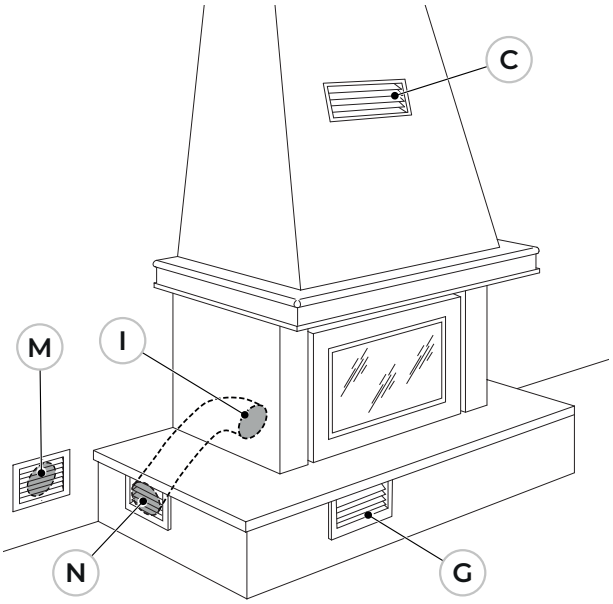

Figure 9

Appliance images are for illustration purposes only

– the lower grille (**L**) provided must be installed on the cladding. An external air vent (**B**) is necessary to recirculate the room air. It can be created inside or outside the cladding.

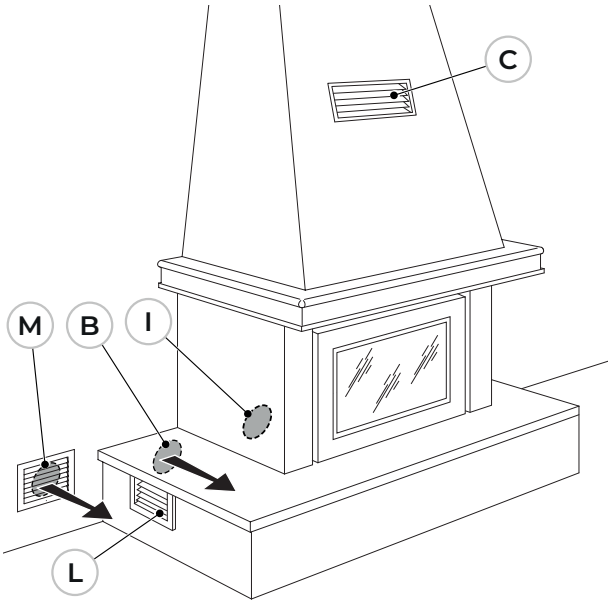

Figure 10

Appliance images are for illustration purposes only

The Ecopalex is equipped at the rear with a (**I**) combustion air inlet pipe.

The heat recovery grille (**C**), not provided, must be positioned at the top of the cladding.

6.8 Air vents with centrifugal ventilation kit

In addition to the combustion air vent (**C**) the following air vents for the fan are required:

1. **Room air intake:** connected to the heating circuit fan, positioned at the side of the cladding, with grille (diameter Ø 15 cm).

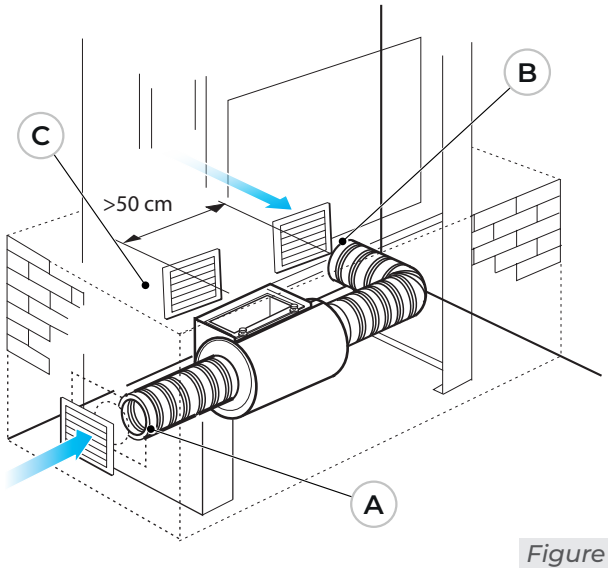

Figure 11

Appliance images are for illustration purposes only

2. **Air intake from adjacent room:** connected to a nearby room (excluding kitchen, bathroom and bedroom), with grille (diameter Ø 15 cm).

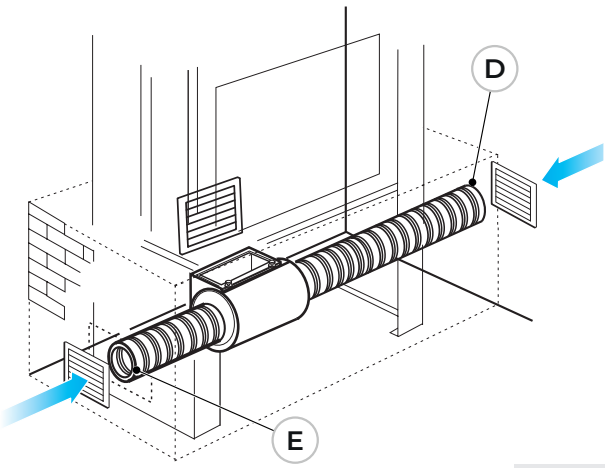

Figure 12

Appliance images are for illustration purposes only

Depending on the solution adopted, the position of the air vents should be marked on both the outer wall and the cladding during the dry installation test.

The fan's air vents can be equipped with an adjustable damper and must be fitted with an insect screen.

All filters and fine mesh grilles must be cleaned at regular intervals as they may become clogged.

6.9 Insertion into a fireplace

First place the appliance on the fireplace grate. Spread a bead of fire-retardant sealant (that withstands 800°C) on the bottom of the pipe collar (at the top). Then slide the appliance into its final position. This can be made easier by putting two 2/3 mm thick sheet metal runners, not provided, under the unit, which will be removed once the appliance is in position.

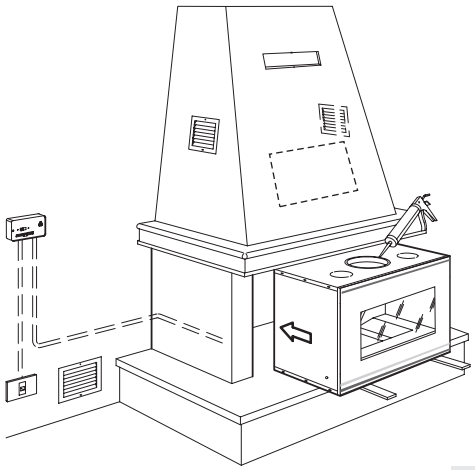

Figure 13

Appliance images are for illustration purposes only

7 COMMISSIONING

7.1 Initial ignition

The initial ignition must be performed by the installer.

Before commissioning, remove any stickers and packaging from inside the firebox and any external stickers on the glass.

Carry out the initial ignition with reduced loads (approx. 1 kg/h). Keep the appliance switched on for at least 4 hours with a low load. Continue with a low load for at least the next three days before using it at maximum power. This process removes any moisture that may have accumulated in the firebricks prior to installation.

During the initial ignition, the appliance may generate odours or flue gas due to the evaporation or drying of certain materials. This is temporary and will gradually disappear.

For this reason, we recommend keeping rooms well-ventilated the first few times the appliance is switched on.

7.2 Combustion

The wood-burning appliance is designed to operate with intermittent combustion. This means that wood must be loaded at regular intervals, letting the previous load burn completely down to glowing embers before adding new wood.

7.3 Bypass valve adjustment

The Ecopalex is supplied with the bypass valve (**B**) already adjusted to the box. If the adjustment is not correct, adjust the valve again until optimal combustion is achieved.

Proceed as follows:

1. Only for ECOPALEX GTM- 70. Lift the deflector (**D**) and remove the afterburner plate (**A**).

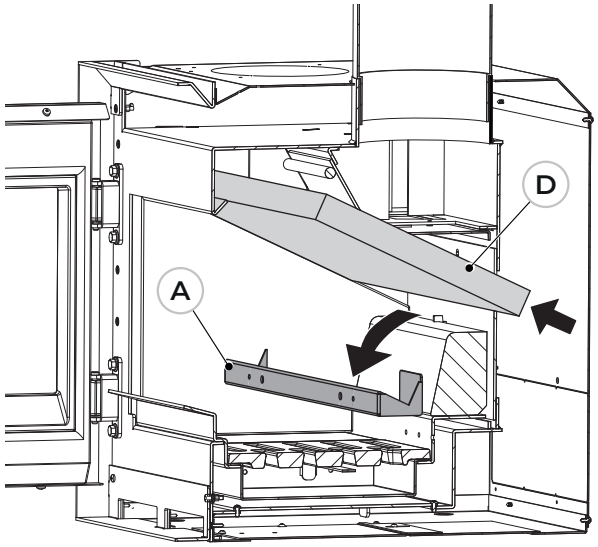

Figure 14

Appliance images are for illustration purposes only

2. Remove the back panel (**B**), side panels (**C**) and the upper deflector in sequence (**D**).

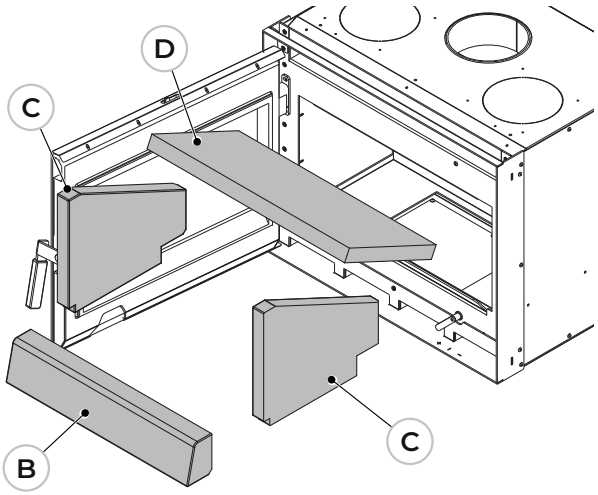

Figure 15

Appliance images are for illustration purposes only

3. Loosen the screw (**E**) in order to position the bypass valve (**F**) on the box.

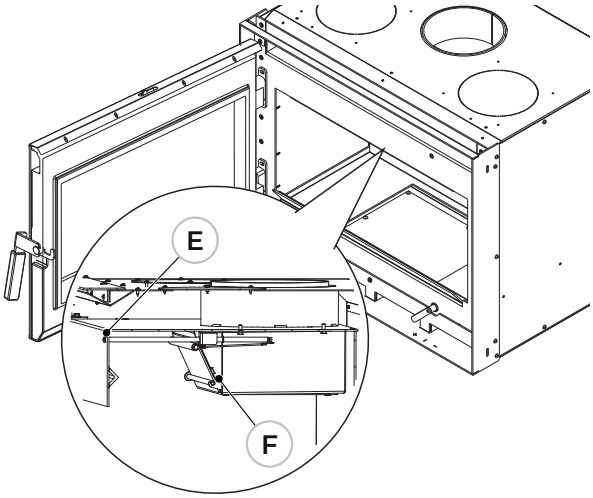

Figure 16

Appliance images are for illustration purposes only

8 OPERATION

Use the glove provided when handling hot parts (e.g. door).

8.1 Ignition

- Open the door using the cool handle, inserting it into the handle slot and turning it upwards.
- Using the glove provided, open to maximum (**+**) the primary air (**A**) and glass cleaning (**B**) adjuster.
- Carefully lay the pieces of wood on top of the firebox grille (**C**).
- Place a natural fire starter on the pile.
- Arrange some kindling in a crisscross pattern on top of the pile.
- Light the fire starter from above.
- Close the fire door and make sure it is securely closed.
- Keep the combustion air (**A**) and glass cleaning (**B**) adjusters open (**+**) to ensure a high, bright flame.
- Reduce the opening of the air vent and glass cleaning (**-**) only when a good base of embers has formed.

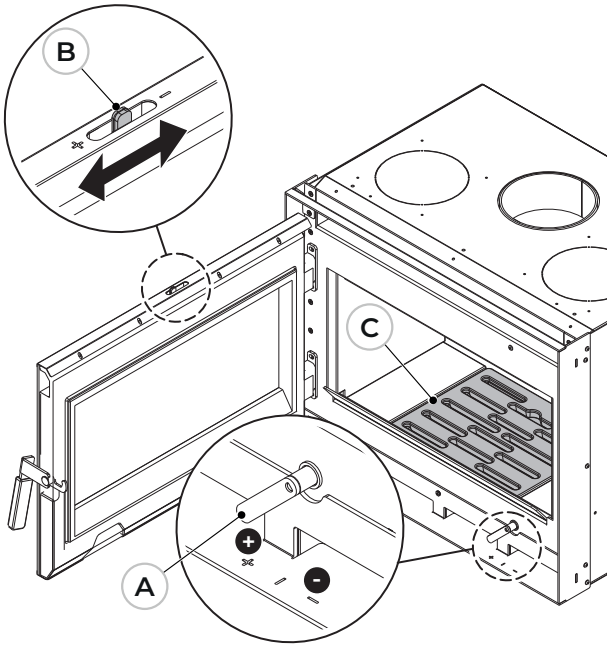

Figure 17

Appliance images are for illustration purposes only

8.2 Refuelling

During operation, proceed as follows to reload the fuel:

– Open the fire door slowly to avoid causing smoke to escape into the room.
– Reload the firebox with fuel and then close the fire door again.

Avoid overheating the appliance by introducing excessive amounts of fuel.

Introduce fuel when embers have formed and the flame has subsided.

The appliance is equipped with a bypass valve, which on opening facilitates the escape of smoke into the exhaust flue, minimising smoke escape into the room.

8.3 Combustion control

Combustion is controlled by the air adjuster (**A**). Turning it towards the (**+**) or (**-**) symbol will increase or decrease the flow of combustion air and result in faster or slower combustion.

8.4 Cleaning the glass

While the fireplace is in operation, it is possible to facilitate the cleaning of the ceramic glass through the control lever (**B**) without having to open the door.

On opening the lever to maximum (**+**), an airflow strikes the surface of the ceramic glass, cleaning it. Use the glove provided to carry out this operation.

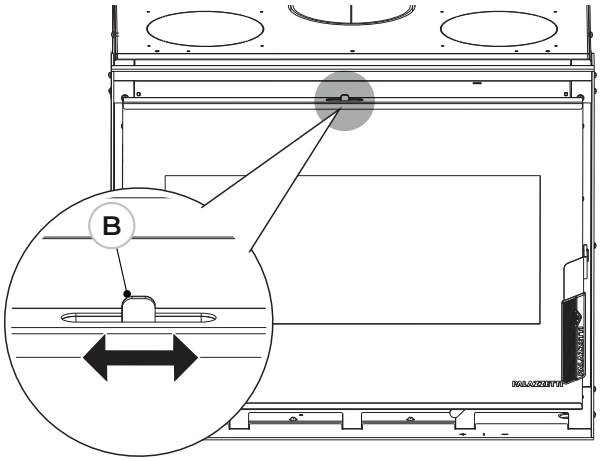

Figure 18

Appliance images are for illustration purposes only

9 CLEANING AND MAINTENANCE

Cleaning: can be carried out by the user.

Maintenance: must only be performed by an authorised service centre.

Precautions prior to any work

Ensure that all parts of the appliance are cool.

Check that the ashes are completely extinguished.

Use the personal protective equipment required by Directive 89/391/CEE.

Ensure that the main power switch is off.

Ensure that the electric power supply cannot be reactivated accidentally.

Disconnect the plug from the wall socket (if fitted).

Use appropriate equipment for maintenance work.

On completing maintenance or repairs:

- reinstall all protections,
- reactivate all safety devices before putting the appliance back into service.

9.1 Cleaning and ordinary maintenance programme

9.1.1 Routine cleaning (user)

	EVERY IGNITION	EVERY WEEK	1 MONTH
Grille (refer to section "Cleaning the firebox")	X		
Ash drawer / pan (refer to section "Cleaning the firebox")	X		
Glass (refer to section "Cleaning the firebox")	X		

9.1.2 Ordinary maintenance (authorised service centre)

	1 YEAR (*)
Gaskets (door, firebricks, etc.)	X
Flue gas manifold	X
Door safety	X
Flue system (refer to section "Flue system maintenance")	X
Appliance (refer to section "Appliance maintenance")	X

(*) At least once a year or every 4000 kg of fuel burned.

9.2 Routine cleaning

9.2.1 Cleaning the firebox

Before every ignition, check that the firebox grate is free of combustion residue that could obstruct the flow of combustion air.

1. Thoroughly clean the grille (**A**). Remove it and clean the firebox with a brush (not provided), sweeping the residue into the ash drawer.

Carefully place the grille on a suitable supporting surface.

Remove ash from the combustion chamber at regular intervals: salts in the ash can corrode the metal. Ash can obstruct the airflow, altering the flame. If the flame approaches the glass, the risk of corrosion increases.

2. Remove the ash drawer (**B**) from the base and vacuum out any ash deposited in the compartments below.

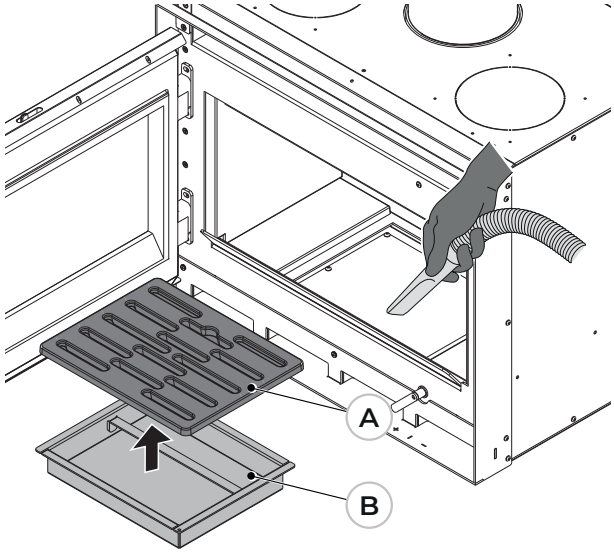

Figure 19

Appliance images are for illustration purposes only

The ash drawer, located under the firebox, must be emptied every day. If the ash reaches the maximum level, it can cause:

– overheating of the cast-iron firebox grille;
– obstruction of the airflow, hindering the proper functioning of the firebox.

3. Vacuum the rear (**C**) and front (**D**) holes of the combustion air distributor in order to avoid any build-up of ash.

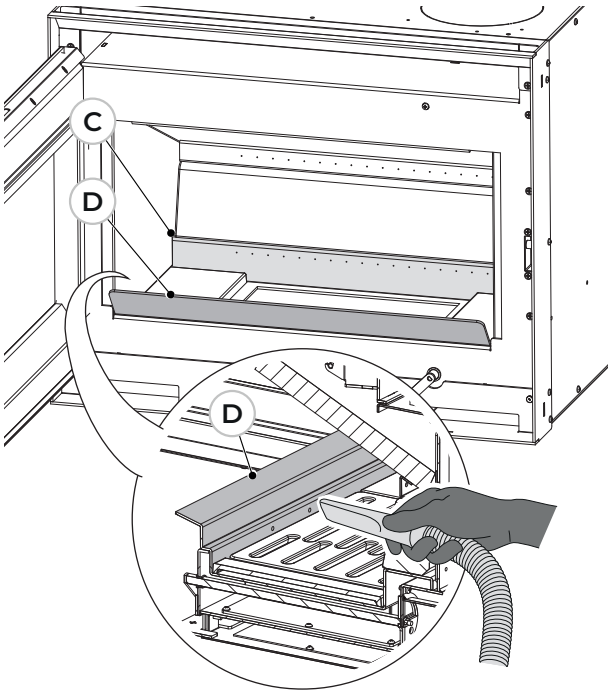

Figure 20

Appliance images are for illustration purposes only

The firebricks expand at high temperatures during appliance operation, causing minor deformations. For this reason, gaps between pieces are normal. During combustion, these gaps are filled with ash, which absorbs the expansion of the firebricks.

9.2.2 Cleaning the glass

Use a damp cloth or dampened paper, dipped into the ash.

Rub until the glass is clean.

Do not clean the glass while the appliance is in operation.

Do not use abrasive sponges, to avoid scratches.

Do not use solvents, acids or detergents, liquid cleaners or aggressive products.

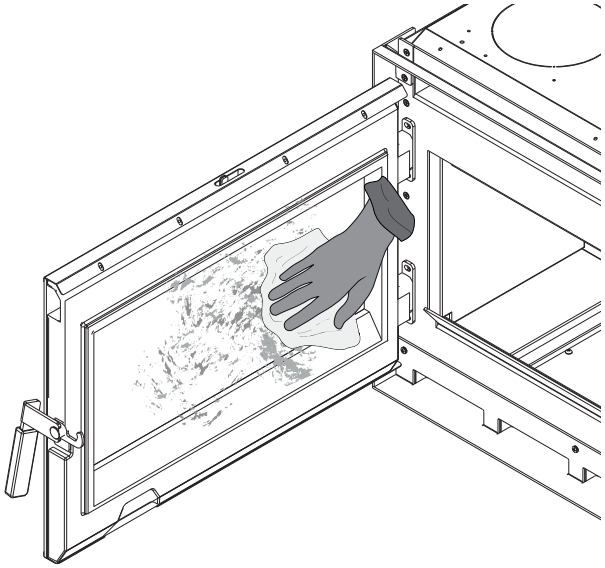

Figure 21

Appliance images are for illustration purposes only

9.3 Ordinary maintenance

9.3.1 Flue gas manifold maintenance

Open the door, remove the back panel (**A**), side panels (**B**) and the upper deflector in sequence (**C**) (section **"Bypass valve adjustment "**).

Remove the flue gas manifold cap (**A**).

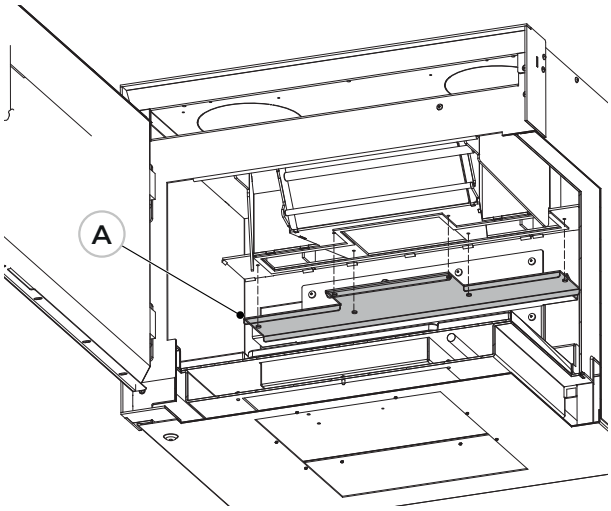

Figure 22

Appliance images are for illustration purposes only

Use a brush with flexible attachment to clean the flue gas passages in the combustion chamber.

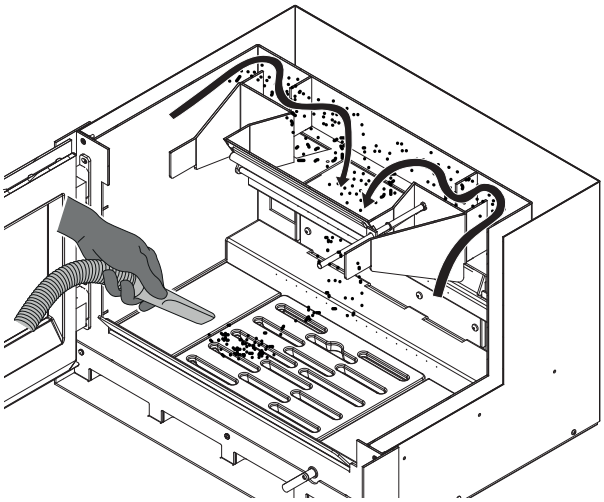

Figure 23

Appliance images are for illustration purposes only

Remove any residue that has dropped into the flue gas manifold.

Use an ash vacuum to facilitate the operation.

9.3.2 Flue system maintenance

Do this at least once a year or every 4000 kg of fuel burned, as indicated by the appliance standard.

Always use specialised personnel.

If there are horizontal sections, check and remove any ash and soot deposits before they clog the flue gas passage.

Internal build-up reduces draught.

When it builds up to 5-6 mm thick, it can ignite in the presence of high temperatures and sparks, posing a serious risk to the exhaust flue and the house.

9.3.3 Appliance maintenance

To be carried out at least once a year, or whenever the appliance signals that maintenance is required.

During maintenance work, the technician must:

- clean the flue gas passages thoroughly and completely;
- check bypass valve adjustment;
- check the condition and seal of all gaskets;
- check the condition and cleanliness of all internal components;
- check the seal and cleanliness of the flue gas outlet coupling;
- check the appliance is working correctly.

10 DEMOLITION AND DISPOSAL

Demolition and disposal are the owner's responsibility.

Comply with the regulations in force in the country for:

- disposal of materials;
- any disposal report;
- environmental safety and protection.

Disposal of materials may be carried out by authorised recovery and disposal companies.

Ensure that the chosen company is certified and operates in compliance with current environmental safety and protection regulations.

All operations must be carried out with the appliance switched off.

Always disconnect the electric power supply, if present, before starting.

Do not leave the appliance in accessible areas: constitutes a serious danger to people and pets.

Scrap the chimney structure through authorised companies.

Dispose of the different parts of the appliance separately to:

- avoid negative environmental and health consequences;
- recover materials and save energy and resources.

According to European legislation, spent catalysts are special non-hazardous waste.

They should not be disposed of with household waste, but delivered to:

- recycling centres;
- municipal collection centres (handled like end-of-life car parts, e.g. particulate filters).

Responsibility for any damage to persons and pets always lies with the owner. Upon demolition, the CE marking, this manual and other documents relating to this appliance must be destroyed.

10.1 Disposal of electrical components (where present)

Proceed as follows to ensure correct and environmentally friendly disposal:

- completely remove the electrical apparatus from the appliance;
- separate any storage cells or batteries in the electronic boards;
- deliver the component to authorised waste recovery companies.

Disposal of batteries (according to European Directive 2006/66/CE)

Replace the battery when the charge is depleted. At end of life, do not dispose of the battery together with unsorted waste: it must be handed in at the appropriate collection centres or at authorised dealers.

As a reminder of the obligation to dispose of batteries separately, a crossed-out wheelie bin symbol is displayed on the battery.

Non-compliant disposal results in administrative sanctions as per current legislation.

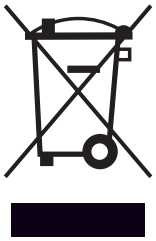

Disposal of the appliance. The crossed-out wheelie bin symbol on the appliance label indicates that the appliance must not be disposed of as unsorted waste, but must be taken to dedicated collection centres for recovery and recycling, in compliance with:

- Art. 13 of Legislative Decree 151/2005;
- European Directive 2002/96/CE (RAEE).